8161253

PERMISSIBLE VARIATION ON COMMON FRACTION DIMENSIONS TO MACHINED SURFACES TO BE ±.01" UNLESS OTHERWISE SPECIFIED. FABRICATION TOLERANCE.

BREAK ALL SHARP CORNERS UNLESS OTHERWISE SPECIFIED.

COUNTERSINK ALL TAPPED HOLES 118° X ONE THR'D DEEP

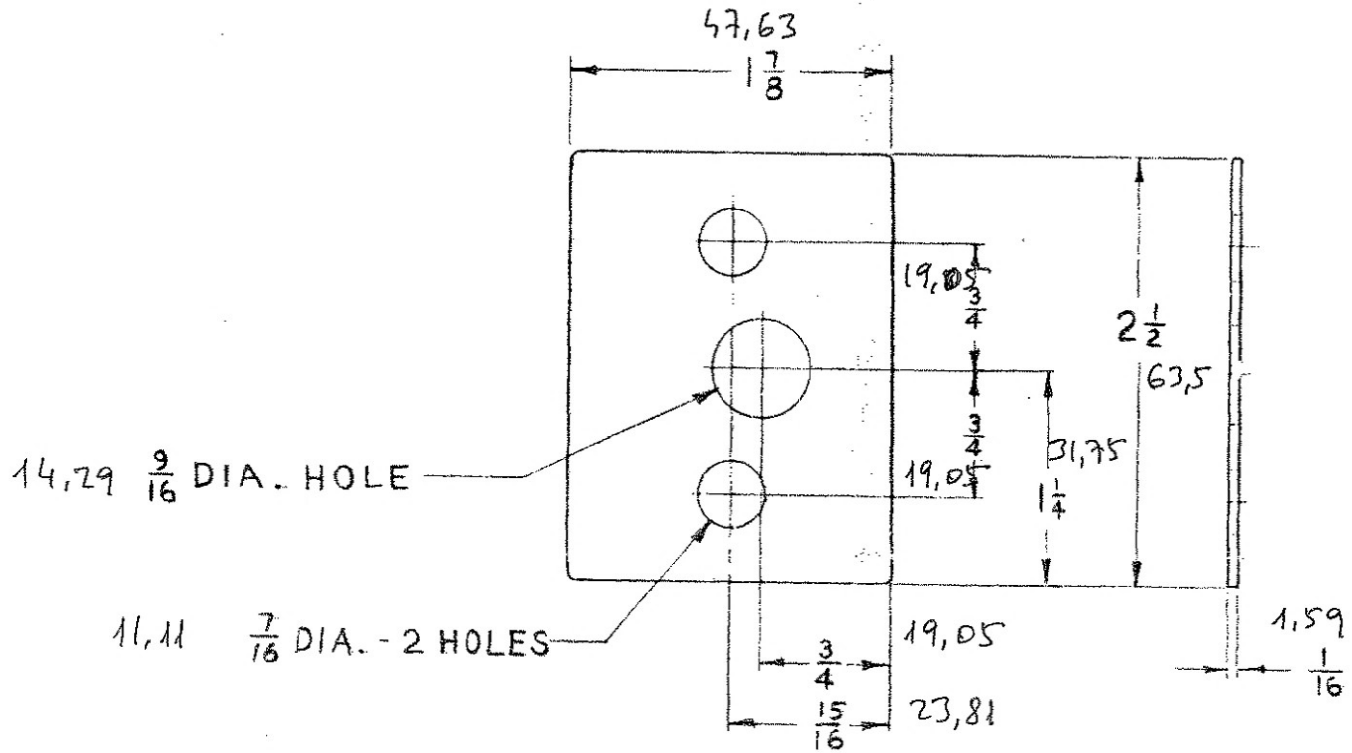

Y7-55

Yer No	Sira No
	14028

TB 1211

R.F.C. NO.	REV. LET.	REVISION	DATE	BY	CK.	APV'D.
R-5099	B	MAT'L. WAS EMS-621 FIB.GAS	5-6-55	ZEL-ISKO	N.E.H.	
LS113-4	A	SOURCE STAMP REMVED	5-22-50	B.MWE		
		FIRST USED ON SW-8				

NO. REQUIRED PER ASSEMBLY

MATERIAL: EMS-623 GRADE 1223-3 GASKET

DR. B. L. Polinak — DATE 4-15-50

CK. — 5-8-50

CH. CK. — SUP.

WELD. — CH. DP. — 5-10-50

MAT'L. — ENGR.

NAME OF PART | PART NO. | IT. NO.

ELECTRO-MOTIVE DIVISION
GENERAL MOTORS CORPORATION
LA GRANGE, ILLINOIS, U.S.A.

GASKET

DATE OF PRINT

PART NO. 8161253

FORM EMD 40242 2000 4-49