Detail "C"
scale 5:1

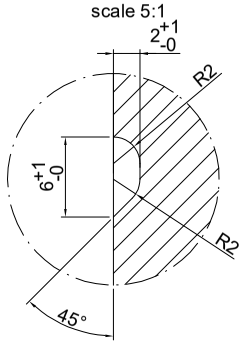

Section view A-A

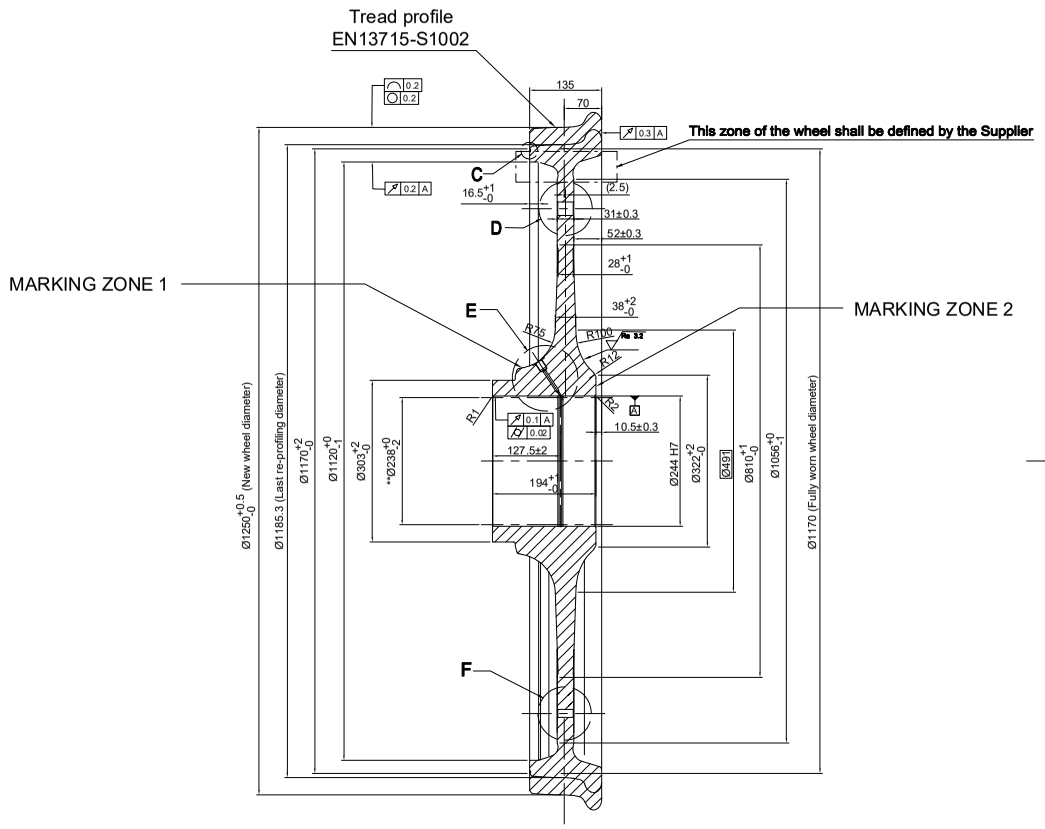

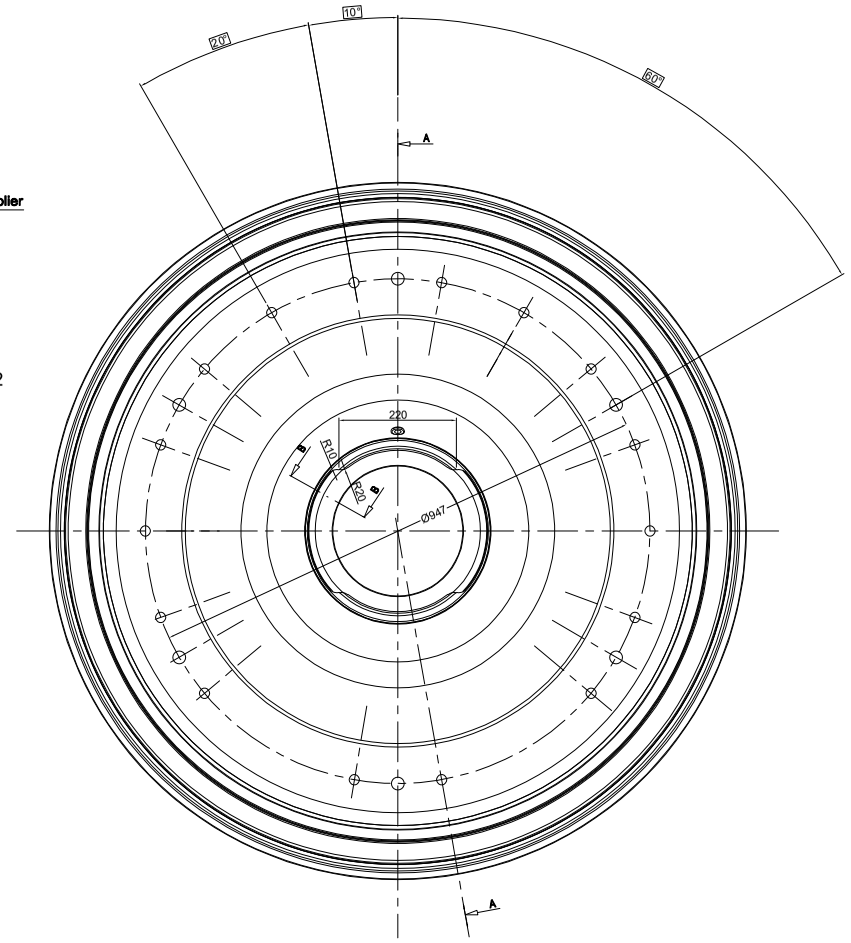

Detail "D"
scale 5:1

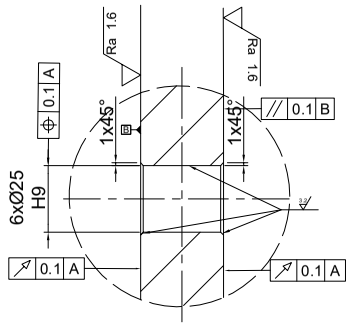

Section view B-B
scale 2:1

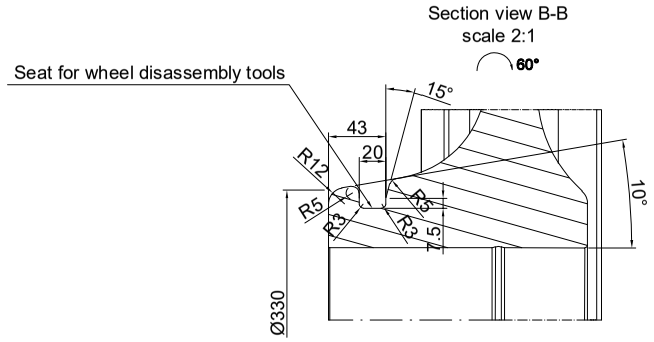

Detail "E"
scale 2:1

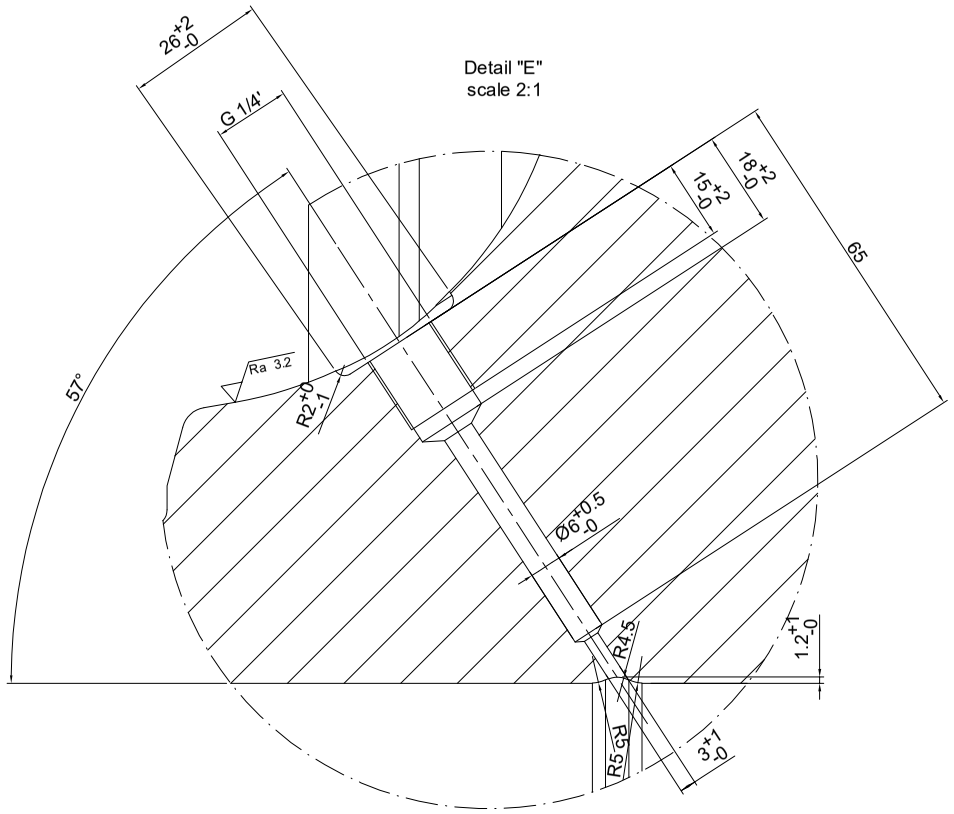

Detail "F"
scale 5:1

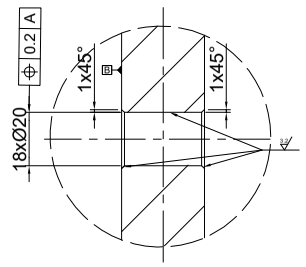

MARKING SAMPLE

Provide cold marking with the following informations:

MARKING ZONE 1:
A) Manufacturer's mark
B) Manufacture date (month and last two digits of year)
C) Casting number
D) Product code (Serial number after heat treatment)
E) Steel symbol and metallurgical
F) Stamp test
G) Owner's mark "TÜRASAŞ"

MARKING ZONE 2:
H) Position of the imbalance and the symbol reflecting its value (Static imbalance of the wheel <= 125gm)

Note:
-Marking depth: 0,5 mm
-Letters height: 6 mm

General notes:

- Design according to EN13979-1, EN13715 and EN13262 and Technical Specification TS400044

- Manufacture and Delivery according to EN 13262 Category 2

**Rough-machined diameter

Ra 6.3 (Ra 3.2 Ra 1.6)

REV.	REVISION DESCRIPTION	SIGNATURES			
		1	DRAWN	2	CHECKED
		3	APPROVED	4	date
00	ISSUE	1	D.Cerlino	2	M.Berlo
		3	L.Gravinese	4	21/11/2024
01	Minor updating	1	A.Mirugno	2	M.Berlo
		3	L.Gravinese	4	09/01/2025
02	Updated brake disc interface and painting Top Coat	1	A.Mirugno	2	M.Berlo
		3	L.Gravinese	4	14/05/2025
03	Minor updating regarding the marking zone and requirements	1	A.Mirugno	2	V.Colucci
		3	M.Berlo	4	19/02/2026
04	Minor updating of the marking requirements	1	A.Mirugno	2	V.Colucci
		3	M.Berlo	4	20/05/2026
05	Changed position of holes for brake disc interface	1	A.Mirugno	2	M.Berlo
		3	L.Gravinese	4	09/01/2026
06	–	1	–	2	–
		3	–	4	–
07	–	1	–	2	–
		3	–	4	–

POS.	C.L.	DESCRIPTION	SUPPLIER DRAWING CODE	REV	SUPPLIER / MATERIAL / TREATMENT: ER9 (EN13262)	QTY	WEIGHT

TURASAŞ

blue engineering & IT srl

CRITICALITY LEVEL	OVERALL COARSE DIMENSION	SUPPLIER DRAWING CODE
SCALE 1:5 / SIZE A0 / SHEET 1/2 / UNIT OF MEASURE NP / WEIGHT 604.4 kg		CUSTOMER DRAWING CODE
MATERIAL –	THERMAL TREATMENT	SURFACE TREATMENT

TITLE: CoCo Loco

Bogie
General_Drawing
Wheel

HRc | THICKNESS | JOB NUMBER | KEY PLAN REFERENCE

DRAWING CODE: 012BX0000008-000 | REVISION: 05

THIS DRAWING IS PROPERTY OF TURASAŞ. THE COPYING OR USE OF THIS DRAWING WITHOUT WRITTEN AUTHORIZATION IS PROHIBITED. IT MUST BE RETURNED IN CORRESPONDENCE OF REQUEST OF TURASAŞ

CAD DRAWING - MANUAL CHANGES ARE FORBIDDEN